PLASTITALIA™ S.p.A.
high performance fittings

TECHNICAL DATASHEET

?????? ??????? ????

???? ?? ?????? ??????? ????????? ?????? ??????

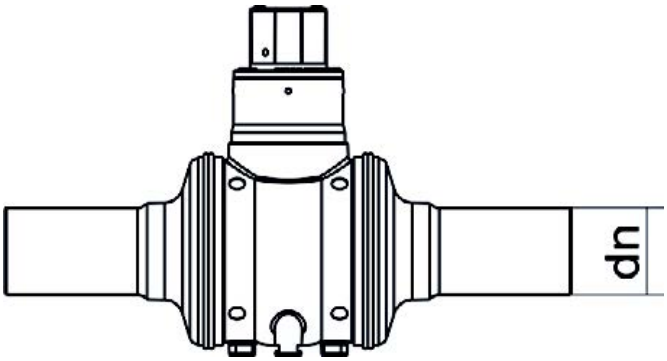

PRODUCT DETAILS	
ITEM CODE	VPP025C.I-SL
d_n	25
SDR DESIGN	11

GEOMETRIC CHARACTERISTICS	
D [mm]	25
d_n	25
DN	20
H [mm]	84
Z [mm]	310
Z1 [mm]	190

*The pictures are for illustrative purposes only. the product may differ in color and / or some of its parts.

PLASTITALIA SPA reserves the right to revise this specification, while maintaining compliance with the requirements of the product without prior notice. Tolerance on diameters and thickness according to the standards unless otherwise specified. Tolerance: ± 5%

Via Ferrara - 98061 - Brolo (ME) - Italy tel. +39 0941 536311 fax +39 0941 561476 info@plastitaliaspa.com
www.plastitaliaspa.com